TUMBLE DRYERS | GREEN EVOLUTION

FAGOR

Tumble Dryers

FD - 25 TP2
FD - 35 TP2
FD - 50 TP2

ADVANCE

HIGH PERFORMANCE, EFFICIENT TECNOLOGY, ADVANCE DRYING

TOUCH PLUS CONTROL | STAINLESS STEEL DRUM | MIXED FLOW | SOFT TOUCH | AUTOREVERSE DRUM

DC?RSPCQ

—

- User friendly and totally programmable microprocessor with a 7" **Touch II screen**
- USB Connection to upload programming or dowload traceability, data analysis.You can program time of the day promotions and discounts automatically.
- Videos shown on display: ads, instructions (useful for coin laundry)

- Anti-wrinkle system.
- End of cycle tone.
- Emergency stop button and security micro magnet to stop operation.
- Drum motion by direct drive-gearbox transmission.
- Automatic reverse rotation of the drum.
- Frequency inverter for smoother operation.

+ MNJ ⟷ Tc l bcb: D_emp bpwcpq a_l `c c_qgjw am l tcprcb dpm k MNJ rm Qcjd+Qcp tgac _l b vice versa,

- Easy-to-clean, outer casing in gray skin-plate with stainless steel look.
- Ergonomic big loading door with a 180º opening and the option of double glazing.
- Axial-radial airflow, resulting in greater drying efficiency.
- Drum with special smooth perforations for the gentle treatment of fabrics.
- Stainless steel lint filter at the bottom for more ergonomic, larger, and improved airflow.

OPTIONS:

- iDry System (Intelligent moisture sensor)
- FK System (Integrated fire prevention system).
- Double door-glass.
- Stainless steel side panels.
- Stainless steel front panel.

TECHNICAL DATA	UNIT.	FD- 25		FD - 35		FD- 50	
CAPACITY							
Capacity 1/18	lb	26		40		60	
Capacity 1/20	lb	25		35		50	
Hourly Output *	lb/h	63		70		89.5	
Evaporation Capacity *	l/h	14.5		16.3		20.4	
DRUM							
Ø Drum	in	29.50		29.50		33.70	
Ø Door	in	22.50		22.50		22.50	
Door Center Height	in	38.50		38.50		40.50	
Door Bottom Height	in	27		27		29.25	
Drum Depth	in	18.70		29.50		31.50	
Drum Volume	cu ft	7.42		11.65		16.24	
POWER							
Drum motor power	hp	1/2		1/2		1/2	
Fan motor power	hp	0.33		0.33		0.75	
Electric heating power (elec model)	kW	Not Available		Not Available		Not Available	
Total electric power (elec.model)	kW	Not Available		Not Available		Not Available	
Gas heating power	btu/h	70,000		70,000		105,000	
Total electric power (gas model)	kW	0.89		0.89		1.3	
Steam heating power	kW	40		40		66	
Steam heating power (gas model)	kW	0.89		0.89		1.3	
CONNECTIONS		ELECTRICAL	STEAM / GAS	ELECTRICAL	STEAM / GAS	ELECTRICAL	STEAM / GAS
120 V / 60 Hz / 1	FLA	-	20	-	20	-	20
208-240 V / 50-60 Hz / 1	FLA	Not Available	-	Not Available	-	Not Available	-
208-240 V / 50-60 Hz / 3	FLA	Not Available	-	Not Available	-	Not Available	-
Gas connection	in	1/2"		1/2"		1/2"	
DIMENSIONS / PACKING DIMENSIONS							
Net Width / Gross Width	in	30.9 / 34.0		30.9 / 34.0		35.0 / 38.0	
Net Depth / Gross Depth	in	33.7 / 37.0		44.3 / 48.0		49.4 / 53.0	
Net Height / Gross Height	in	66.7 / 73.0		66.7 / 73.0		71.3 / 76.0	
Height without heating battery	in	-		-		-	
Net weight / Gross weight	lb	379.1 / 396		412.1 / 440		462.8 / 485	
OTHERS							
Max airflow	CFM	500		500		706	
Ø Duct Size	in	8		8		8	
Sound level	dB	64		64		65	

* It may vary depending on the type of heating, filter cleanliness or extraction type.

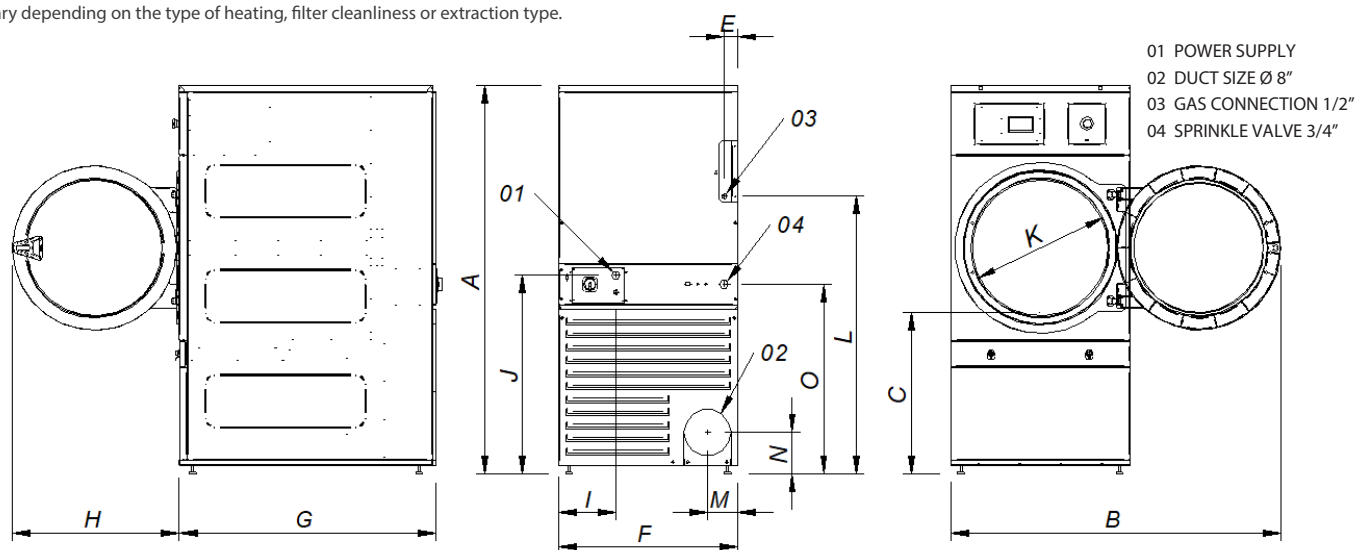

Model		A	B	C	E	F	G	H	I	J	K	L	M	N	O
FD-25	in	67.7	57	27	2.7	30.9	33.7	28.9	3.7	32.3	22.6	48.3	5.25	7.1	32.7
FD-35	in	67.7	57	27	2.7	30.9	44.3	28.9	3.7	32.3	22.6	48.3	5.25	7.1	32.7
FD-50	in	71.3	61	29.3	4.4	35.0	49.4	28.9	8.1	33.9	22.6	52.9	5.25	7.1	34.3

TUMBLE DRYERS | GREEN EVOLUTION

FAGOR

Tumble Dryers

FD - 30 TP2

ADVANCE

HIGH PERFORMANCE, EFFICIENT TECNOLOGY, ADVANCE DRYING

TOUCH PLUS CONTROL | STAINLESS STEEL DRUM | MIXED FLOW | SOFT TOUCH | AUTOREVERSE DRUM

DC?RSPCQ

—

- User friendly and totally programmable microprocessor with a 7" **Touch II screen**
- USB Connection to upload programming or dowload traceability, data analysis.You can program time of the day promotions and discounts automatically.
- Videos shown on display: ads, instructions (useful for coin laundry)

- Anti-wrinkle system.
- End of cycle tone.
- Emergency stop button and security micro magnet to stop operation.
- Drum motion by direct drive-gearbox transmission.
- Automatic reverse rotation of the drum.
- Frequency inverter for smoother operation.

+ MNJ ⟷ Tc l bcb: D_emp bpwcpq a_l `c c_qgjw am l tcprcb dpm k MNJ rm Qcjd+Qcp tgac _l b vice versa,

- Easy-to-clean, outer casing in gray skin-plate with stainless steel look.
- Ergonomic big loading door with a 180º opening and the option of double glazing.
- Axial-radial airflow, resulting in greater drying efficiency.
- Drum with special smooth perforations for the gentle treatment of fabrics.
- Stainless steel lint filter at the bottom for more ergonomic, larger, and improved airflow.

OPTIONS:

- iDry System (Intelligent moisture sensor)
- FK System (Integrated fire prevention system).
- Double door-glass.
- Stainless steel side panels.
- Stainless steel front panel.

TECHNICAL DATA	UNIT.	FD 30 TP2 - ADVANCE	
CAPACITY			
Capacity 1/18	lb	33	
Capacity 1/20	lb	30	
Hourly Output DYNAMIC*	lb/h	66	
Evaporation capacity DYNAMIC*	l/h	15.40	
DRUM			
Ø Drum	in	29.50	
Ø Drum door	in	22.60	
Door center height	in	38.50	
Bottom center height	in	27	
Drum depth	in	24	
Drum volume	cu ft	9.54	
POWER			
Drum motor power	HP	1/2	
Fan motor power DYNAMIC	HP	0.33	
Electric heating power (elec.model)	kW	Not Available	
Total electric power (elec.model) DYN	kW	Not Available	
Gas heating power	btu	70,000	
Total electric power (gas model) DYN	kW	0.67	
Steam heating power ALL RANGES	kW	30	
Steam heating power (gas model) DYN	kW	0.67	
CONNECTIONS		ELECTRICAL	STEAM / GAS
120 V / 60 Hz / 1	FLA	-	20
208-240 V / 50-60 Hz / 1	FLA	Not Available	-
208-240 V / 50-60 Hz / 3	FLA	Not Available	-
Gas connection	in	1/2"	
Ø Steam inlet		3/4"	
Ø Condensed (Steam models)		3/4"	
DIMENSIONS / PACKING DIMENSIONS			
Net Width / Gross Width	in	30.9 / 34	
Net Depth / Gross Depth	in	38.9 / 42.2	
Net Height / Gross Height	in	66.7 / 72.4	
Height without heating battery	in	-	
Net weight / Gross weight	lb	397 / 419	
OTHERS			
Max airflow DYNAMIC	CFM	500	
Ø Fume exhaust	in	8	
Sound level DYNAMIC	dB	64	

* It may vary depending on the type of heating, filter cleanliness or extraction type.

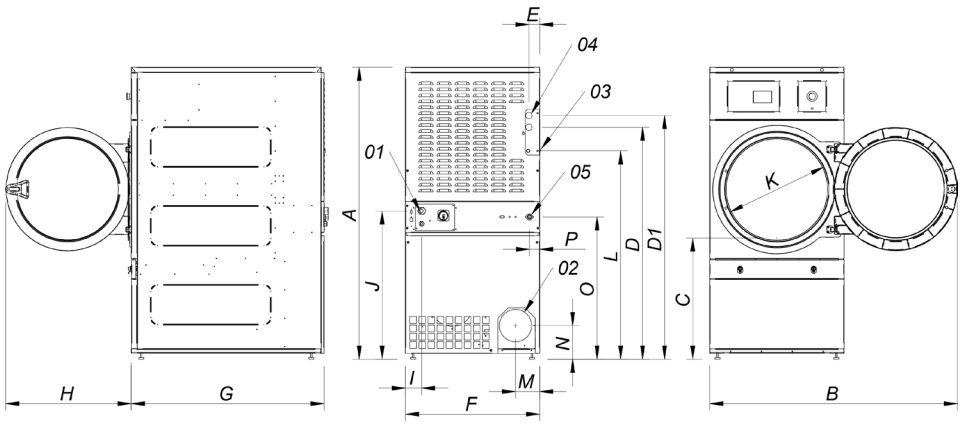

01 POWER SUPPLY
02 FUMES OUTPUT Ø 8"
03 GAS INLET 1/2"
04 STEAM INLET 3/4"
05 CONDENSATE OUTLET 3/4"
06 SPRINKLER VALVE 3/4"

DIMENSIONS (in)	A	B	C	D	D1	E	E1	F	G	H	I	J	K	L	M	N	O	P
FD 30	66.7	57.0	27.1	53.3	56.0	2.7	2.7	30.9	38.9	28.9	3.7	34.3	22.6	48.3	5.2	7.1	32.7	2.6

TUMBLE DRYERS | GREEN EVOLUTION

FAGOR

Tumble Dryers

FD - 65 TP2

FD - 80 TP2

ADVANCE

HIGH PERFORMANCE, EFFICIENT TECNOLOGY, ADVANCE DRYING

TOUCH PLUS CONTROL | STAINLESS STEEL DRUM | MIXED FLOW | SOFT TOUCH | AUTOREVERSE DRUM

DC?RSPCQ

- User friendly and totally programmable microprocessor with a 7" **Touch II screen**
- USB Connection to upload programming or dowload traceability, data analysis. You can program time of the day promotions and discounts automatically.
- Videos shown on display: ads, instructions (useful for coin laundry)

- Anti-wrinkle system.
- End of cycle tone.
- Emergency stop button and security micro magnet to stop operation.
- Drum motion by pulley and belts with the drum supported by wheels.
- Automatic reverse rotation of the drum.
- Frequency inverter for smoother operation.

+ MNJ ⟷ Tc l bcb D_emp bpwcpq a_l `c c_qgjw am l tcprcb dpm k MNJ rm Qcjd+Qcp tgac _l b tgac tcpq_,

- Easy-to-clean, outer casing in gray skin-plate with stainless steel look.
- Ergonomic big loading door with a 180º opening and the option of double glazing.
- Axial-radial airflow, resulting in greater drying efficiency.
- Drum with special smooth perforations for the gentle treatment of fabrics.
- Stainless steel lint filter at the bottom for more ergonomic, larger, and improved airflow.

OPTIONS:

- iDry System (Intelligent moisture sensor)
- FK System (Integrated fire prevention system).
- Double door-glass.
- Stainless steel side panels.
- Stainless steel front panel.

TECHNICAL DATA	UNIT.	FD- 65		FD- 80	
CAPACITY					
Capacity 1/18	lb	70		80	
Capacity 1/20	lb	60		75	
Hourly Output *	lb/h	130.7		140.8	
Evaporation capacity *	l/h	30.9		32.1	
DRUM					
Ø Drum	in	37.25		37.25	
Ø Door	in	31.50		31.50	
Door center height	in	41		41	
Door bottom height	in	64.50		64.50	
Drum depth	in	30.75		36.85	
Drum volume	cu ft	19.4		23.3	
POWER					
Drum motor power	hp	0.75		0.75	
Fan motor power	hp	0.75		0.75	
Electric heating power (elec.model)	kW	Not Available		Not Available	
Total electric power (elec.model)	kW	Not Available		Not Available	
Gas heating power	btu/h	140,000		140,000	
Total electric power (gas model)	kW	1.15		1.15	
Steam heating power	kW	50.1		50.1	
Steam heating power (gas model)	kW	1.15		1.15	
CONNECTIONS		ELECTRIC.	GAS	ELECTRIC.	GAS
120 V / 60 Hz / 1	FLA	-	20 A	-	20 A
208-240 V / 50-60 Hz / 1	FLA	Not Available	-	Not Available	-
208-240 V / 50-60 Hz / 3	FLA	Not Available	-	Not Available	-
Gas connection	BSP	-	1/2"	-	1/2"
DIMENSIONS / PACKING DIMENSIONS					
Net Width / Gross Width	in	38.75 / 42		38.75 / 42	
Net Depth / Gross Depth	in	41.50 / 45.50		47.60 / 51.60	
Net Height / Gross Height	in	76.60 / 82		76.60 / 82	
Height without heating battery	in	-		-	
Net weight / Gross weight	lb	507 / 573		573 / 628	
OTHERS					
Max airflow	CFM	706		706	
Ø Duct Size	in	8		8	
Sound level	dB	65		65	

* It may vary depending on the type of heating, filter cleanliness or extraction type.

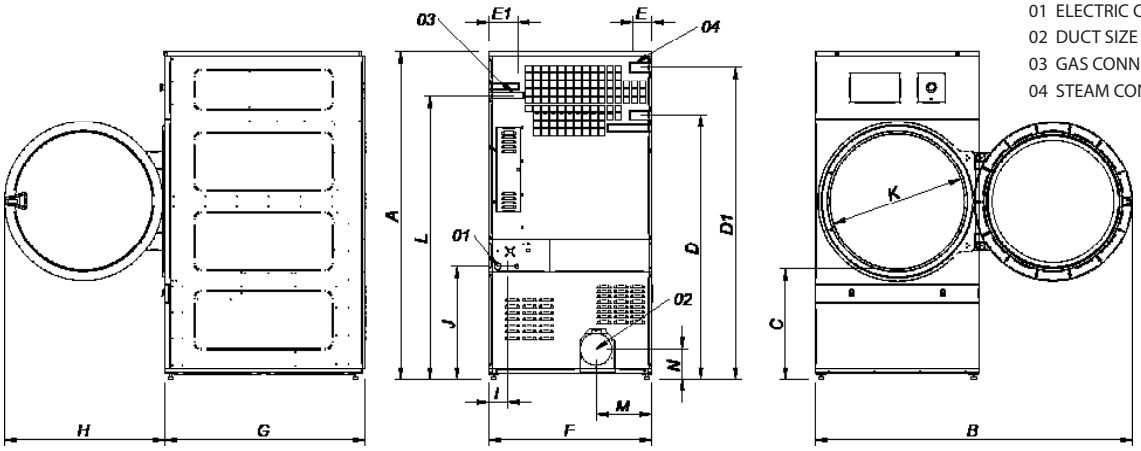

01 ELECTRIC CONNECTION
02 DUCT SIZE Ø 8"
03 GAS CONNECTION 1/2"
04 STEAM CONNECTION 1"

DIMENSIONS (in)	A	B	C	D	D1	E	E1	F	G	H	I	J	K	L	M	N
FD-65	76.60	75	25	62.60	74	4.50	6.85	38.75	41.50	37.75	4.30	26.75	31.60	67.25	13.35	7
FD-80	76.60	75	25	62.60	74	4.50	6.85	38.75	47.60	37.75	4.30	26.75	31.60	67.25	13.35	7

FAGOR

FD 100-135-180 G

HIGH PERFORMANCE, EFFICIENT TECNOLOGY, ADVANCE DRYING

TOUCH PLUS CONTROL | AUTOREVERSE DRUM | MIXED FLOW | STAINLESS STEEL DRUM | SOFT TOUCH

CHARACTERISTICS

- ✓ User friendly and totally programmable microprocessor with a 7" Touch II screen.
- ✓ USB Connection to upload programming or download traceability, data analysis. You can program time of the day promo-tions and discounts automatically.
- ✓ Videos shown on display: ads, instructions (useful for coin laundry).
- ✓ Anti-wrinkle system. End of cycle tone.
- ✓ Emergency stop button and security micro magnet to stop operation.
- ✓ Drum motion by direct drivegear-box transmission. Automatic reverse rotation of the drum.
- ✓ Frequency inverter for smoother operation. OPL Vended.
- ✓ Fagor dryers can be easily converted from OPL to Self-Service and viceversa.
- ✓ Stainless steel drum
- ✓ Easy-to-clean, outer casing in gray skin-plate with stainless steel look.
- ✓ Ergonomic big loading door with a 180º opening and the option of double glazing.
- ✓ Axial-radial airflow, resulting in greater drying efficiency. Drum with special smooth perforations for the gentle treatment of fabrics.
- ✓ Stainless steel lint filter at the bottom for more ergonomic, larger, and improved airflow.

OPTIONS:

- ✓ iDry System (Intelligent moisture sensor).
- ✓ FK System. (Integrated fire prevention system). Double door-glass.
- ✓ Stainless steel side panels.
- ✓ Stainless steel front panel.

www.fagorcommercial.com

FAGOR COMMERCIAL
13105 NW 47th Avenue
Miami, FL 33054
T. 305 779 0170
info@fagorcommercial.com

TECHNICAL DATA

CAPACITY	UNIT.	FD -100 G	FD - 135 G	FD - 180 G
Capacity 1/18 Capacity 1/20	lb	107.6/ 98.8	147.3/132.2	183.7/132.5
Hourly Output (gas)	lb/h	177.2/186.0	283.6/317.5	300.8/413.4
Evaporation Capacity (gas)	l/h	45/48	64/72	68.2/93.8
DRUM				
Drum	In	48.22	48.22	48.20
Door	In	31.57	31.57	31.57
Door Center Height	In	50.19	50.19	50.19
Load Hole bottom height	In	34.40	34.40	34.40
Drum length	In	29.92	40.15	49.29
Drum Volume	Cu ft	31.6	42.4	53.0
POWER				
Drum motor power	Hp	1.05	1.4	2.01
Fan motor power	HP	1.47	1.47	1.47
Electric heating Power	kW	54	72	72
Total electric power (elec model)	kW	55.9	4.25	74.65
Gas Heating Power	kW	204.72	307.09	409.45
Instant Propane Gas Consumption (G31)	Btu/h	5.14	7.71	10.28
Instant natural gas consumption (G20)	m3/h	6.35	9.53	12.71
Total electric power (gas model)	kW	1.9	2.25	2.65
Steam Heating Power	kW	91.3	128	128
Total electric power (steam model)	kW	1.9	2.25	2.65
CONNECTIONS				
Voltage 230V - 1 PH + N + G	Nº x mm2 / A			
Voltage 230V- 3 PH + G	Nº x mm2 / A	4 x 2.5 / 20A	4 x 2.5 / 32A	4 x 2.5 / 32A
Voltage 440 V- 3 PH + N + G	Nº x mm2 / A	5 x 35 /100A 5 x 1.5 / 20A	5 x 50 / 125A 5 x 1.5 / 32A	5 x 50 / 125A x5 x 1.5 / 32A
Gas Inlet	BSP	3/4"	3/4"	3/4"
DIMENSIONS / PACKAGING DIMENSION				
Net width / Gross width	In	50/52.4	50/52.4	50/52.4
Net Depth / Gross Depth	In	43.6/46.7	53.8/56.9	63/67.2
Net Height / Gross Height	In	93.8/84.7	93.8/84.7	93.8/84.7
Net Weight / Gross Weight	Lb	871.0/948.2	1166.4/1267.9	1448.7/267.9
OTHER				
Max airflow	CFM	1765.7	1765.7	1765.7
Fume exhaust	in	11.81	1.81	11.81
Sound Level	dB	67	67	67

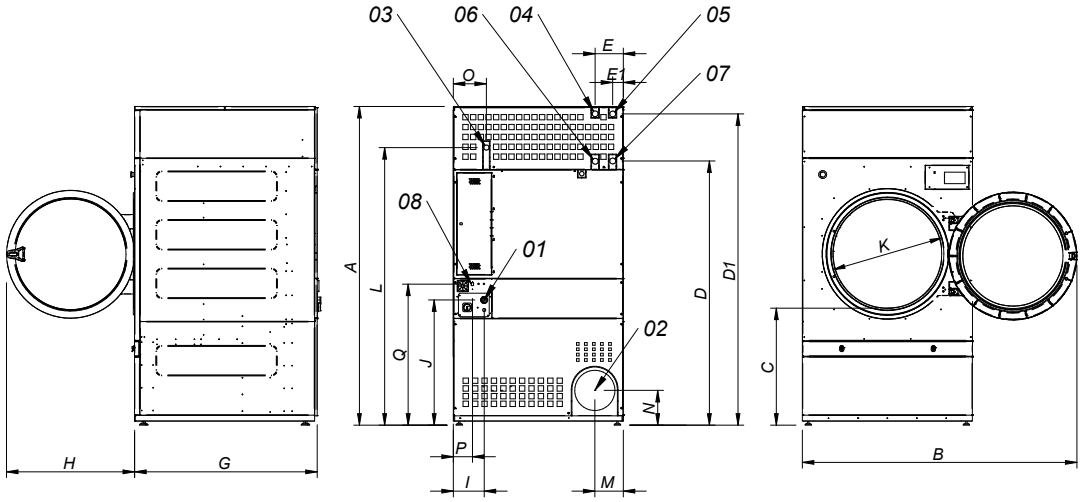

01 ELECTRIC CONNECTION
02 FUMES OUTLET Ø300
03 GAS CONNECTION 3/4"
04 STEAM CONNECTION (100 Lb) 1"
05 STEAM CONNECTION (135/180Lb) 1" 06 CONDENSATION OUTLET (100 Lb) 1" 07 CONDENSATION OUTLET (135/180 Lb) 1" 08 ETHERNET CONNECTION

		A	B	C	D	D1	E	E1	F	G	H	I	J	K	L	M	N	O	P	Q	R	S
FD-100G	TP2	2380	2045	874	1981	2311	211	80	1270	1106	956	248	935	802	2088	214	240	244	1841	308	160	1053
FD-135G	TP2	2380	2045	874	1981	2311	211	80	1270	1366	956	248	935	802	2088	214	240	244	1841	308	160	1053
FD-135G	TP2	2380	2045	874	1981	2311	211	80	1270	1598	956	248	935	802	2088	214	240	244	1841	308	160	1053